VEGETABLE PREPARATION MACHINE CA-42

High production vegetable preparation machine with an hourly output of up to 850 kg / 1875 lb.
2-speed-appliance.

Sales Description

2-speed motor block + large production attachment.

A perfect cut

- ✓ High precision adjustments to obtain a uniform and excellent-quality cut.
- ✓ It can be fitted with a wide range of discs and grids of the highest cutting quality. By combining these accessories, it is possible to obtain more than 70 different types of cuts and grating grades.
- ✓ Head with blade on one side that distributes products inside the mouth and cuts and distributes whole products such as cabbage.
- ✓ Head equipped with high ejector: enables a higher quantity of product to be processed.

Built to last

- ✓ Made from stainless steel and food-grade materials of the highest quality: stainless steel motor block and food-grade aluminium head.
- ✓ High power asynchronous motor.

Maximum comfort for the user

- ✓ Ergonomic design for maximum user comfort.
- ✓ Lateral product output: requires less space on the worktop and guides the product, avoiding splashes.
- ✓ The electronic command panel is very intuitive.

Maintenance, safety, hygiene

- ✓ Lever and lid easily removable for cleaning purposes.
- ✓ Combination of safety systems: head, cover, power switch.
- ✓ Appliance certified by NSF International (regulations on hygiene, cleaning and materials suitable for contact with foods).
- ✓ 100% tested.

Includes

- ✓ 2-speed motor block.
- ✓ Large capacity hopper.
- ✓ Core drill (optional use).
- ✓ Universal grid cleaner QC-U.

Optional

- ❑ Tube head.
- ❑ High production semi-automatic hopper.
- ❑ Support-trolley.
- ❑ Discs and grids.
- ❑ Grid cleaning kit.

Accessories

- ❑ FCC curved slicing discs
- ❑ FCO rippled slicing discs
- ❑ FFC chipping grids
- ❑ FMC dicing grids
- ❑ FCE julienne discs
- ❑ Long vegetable attachment
- ❑ Disc and grid packs - Heavy Duty
- ❑ Disc and grid holder
- ❑ Stand-trolley
- ❑ Automatic hopper
- ❑ Quick Cleaner: grid cleaners
- ❑ FC slicing discs
- ❑ SH shredding & grating discs
- ❑ Déli-cut cutting kit - Heavy Duty
- ❑ Universal grid cleaner QC-U

Specifications

Hourly production: 200 kg - 850 kg
Inlet opening: 286 cm²
Disc diameter: 205 mm
Motor speed:365 - 730 rpm
Loading: 750 W
Noise level (1m.): <70 dB(A)
Background noise: 32 dB(A)
External dimensions (W x D x H)
Width: 391 mm
Depth: 396 mm
Height: 652 mm
Net weight: 24 kg
Crated dimensions
440 x 430 x 700 mm
Volume Packed: 0.13 m³
Gross weight: 28.5 / 29 kg

Available Models

1050733	Vegetable preparation machine CA-42 400/50/3
1050734	Vegetable preparation machine CA-42 400/60/3
1050735	Vegetable preparation machine CA-42 220/60/3

** Ask for special versions availability*

DYNAMIC PREPARATION
COMMERCIAL VEGETABLE PREPARATION MACHINES

product sheet
updated **11/11/2025**

SAMMIC, S.L. · Basarte, 1
20720 AZKOITIA (Gipuzkoa) · SPAIN

Copyright 2025 © Sammic S.L.

VEGETABLE PREPARATION MACHINE CA-42

High production vegetable preparation machine with an hourly output of up to 850 kg / 1875 lb.
2-speed-appliance.

DYNAMIC PREPARATION
COMMERCIAL VEGETABLE PREPARATION MACHINES

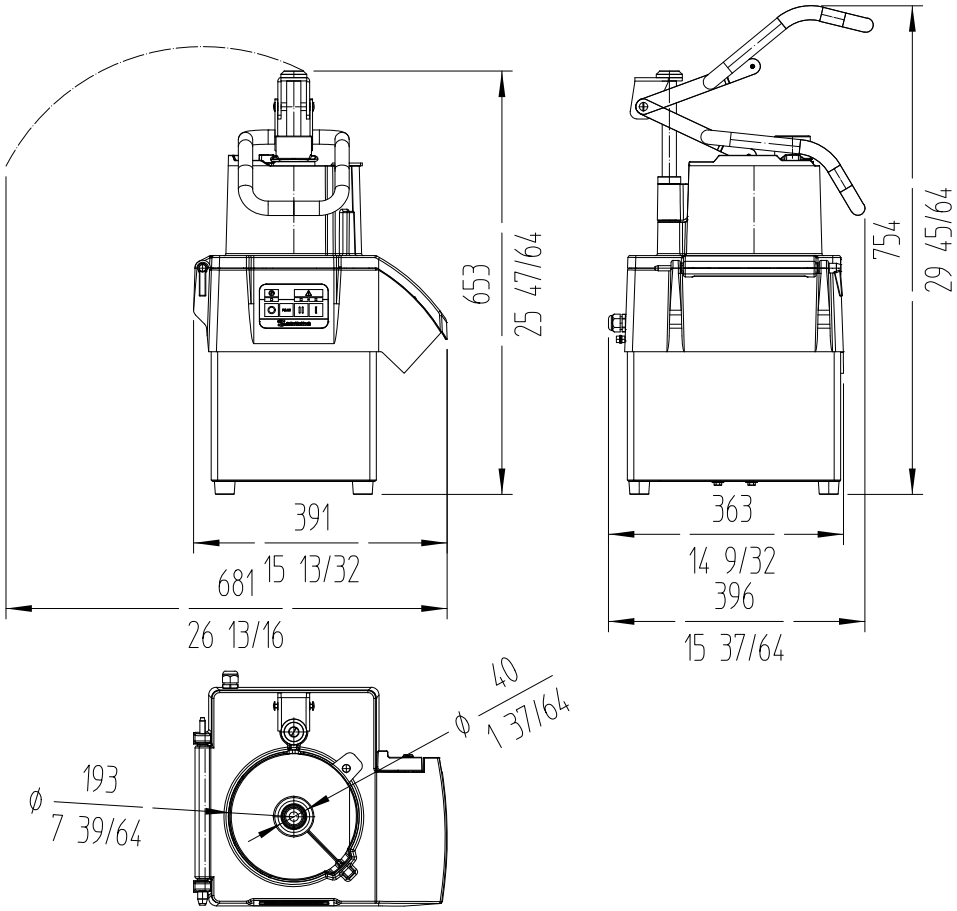

sammic | sammic.com
Food Service Equiment Manufacturer
Polígono Basarte, 1.
20720 Azkoitia, Spain
phone +34 943 15 72 36
sales@sammic.com

Project	Date
Item	Qty
Approved	

product sheet
updated 11/11/2025

Copyright 2025 © Sammic S.L.