Ice Cube

CB 246 HC 2.0 Wi

B-Qube

Self-contained ice maker - Sprayer system
Daily production up to 30 kg

Hotel	●	●	●	●	●	●	●	○
Restaurant	●	●	●	●	●	●	○	○
Fast food	●	●	●	○	○	○	○	○
Bar	●	●	●	●	●	●	●	●
Disco	●	●	●	●	●	●	●	●
Fish markets	○	○	○	○	○	○	○	○
Supermarkets	○	○	○	○	○	○	○	○
Medical & SPA	●	●	○	○	○	○	○	○
Industry	●	○	○	○	○	○	○	○

Hotel	●	●	●	●	●	●	●	○
Restaurant	●	●	●	●	●	●	○	○
Fast food	●	●	●	○	○	○	○	○
Bar	●	●	●	●	●	●	●	●
Disco	●	●	●	●	●	●	●	●
Fish markets	○	○	○	○	○	○	○	○
Supermarkets	○	○	○	○	○	○	○	○
Medical & SPA	○	○	○	○	○	○	○	○
Industry	○	○	○	○	○	○	○	○

Available Drain Pump (DP) version

Available Drain Pump (DP) version

▶ Features & Plus

- Compact and crystal cube
- AISI 304 SS Scotch Brite finish
- Tropical class +43°C
- Air or water cooling system
- Remote operation and monitoring system
- Electronic probes
- Easy cleanable internal rounded surfaces
- HCFC-Free insulated storage
- RoHS Free
- Disappearing insulated door
- ON-OFF rocker switch
- Standard and special voltages
- HFC Free
- Automatic Washing system

Green-Tech Design

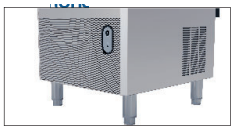

Side openings for better ventilation

Easy cleanable internal rounded surfaces

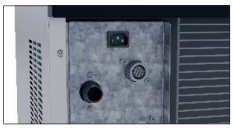

Plug-in electrical connection

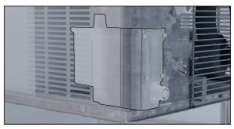

Drain Pump (DP)

3 Years Warranty subject to limitations

▶ Certifications available for this model

BREMA

www.bremaice.it
info@bremaicegroup.it

We are Brema Group

Ice Cube

CB 246 HC 2.0 Wi

B-Qube

Self-contained ice maker - Sprayer system
Daily production up to 30 kg

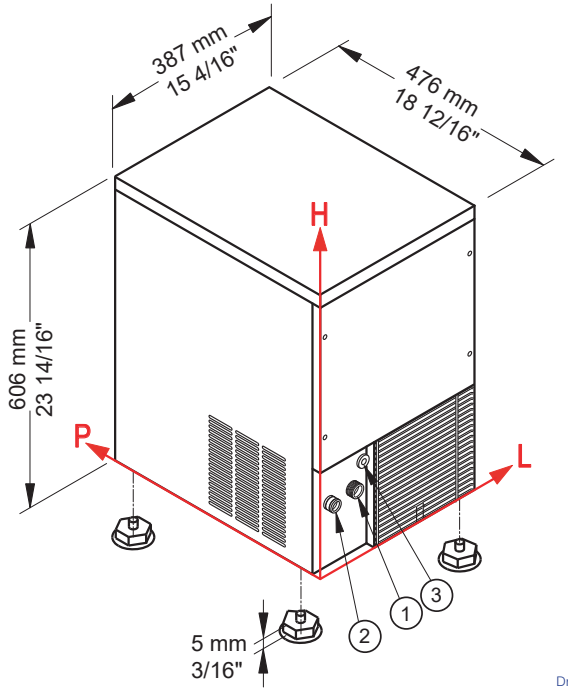

Installation

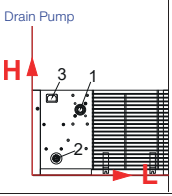

▶ Working conditions

- Location: **Indoor**

	Min	Max
Ambient temperature	+10° C / +50° F	+43° C / 110° F
Water temperature	+3° C / +37° F	+32° C / +90° F
Voltage	-10%	+10%
Water inlet pressure	1bar (14 psi)	6bar (84 psi)

▶ Available ice cube size

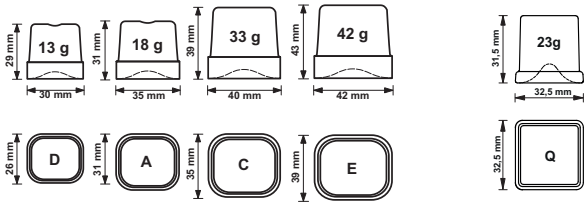

▶ Performances

		Water temperature					
		7° C	45° F	15° C	60° F	21° C	70° F
Air temperature	10° C	30 kg					
	50° F		66 lbs				
	21° C			26 kg			
	70° F				57 lbs		
	32° C					21 kg	
	90° F						46 lbs

▶ Connections standard version

① Water in.:130 mm / 5 2/16” - 145 mm / 5 11/16” - 3/4”
② Water out.: 49 mm / 1 15/16” - 140 mm / 5 8/16” - 24 mm / 15/16”
③ Electrical connections: 95 mm / 3 12/16” - 209 mm / 8 4/16”

Connections DP version

1 Water in.:134 mm / 5 4/16” - 182 mm / 7 3/16” - 3/4”
2 Water out.:66 mm / 2 10/16” - 51 mm / 2” - 24 mm / 15/16”
3 Electrical connection: 55 mm / 2 3/16” - 214 mm / 8 7/16”

All measures are referred to the rear bottom-left corner (L-H-Ø)

▶ Technical information

Production in 24h	26 kg / 57 lbs
Store capacity, up to	6 kg / 13 lbs
Cooling system	A - W
Kind of cube	A-18g, C-33g, D-13g, E-42g, Q-23g
Refrigerant	R290
Standard voltage	220-240 V ~ 50 Hz
Average power consumption	270 W
Fuse	10 A
Electrical consumption	31 kWh/100kg

Water consumption	A: 2,5 l/kg - 30 gal/100 lbs
	W: 12 l/kg - 143,8 gal/100 lbs
Sizes (L-P-H mm)	387 - 476 - 606
(L-P-H in)	15 4/16 - 18 12/16 - 23 14/16
Sizes with pack (L-P-H mm)	440 - 520 - 780
(L-P-H in)	17 5/16 - 20 8/16 - 30 11/16
Net weight	31 kg / 68 lbs
Gross weight	37 kg / 82 lbs
Finish	Stainless steel, 18/8, scotch brite

All the technical information must be considered at the following conditions:
Sizes without feet
Standard Cube (18g)
Ambient temperature +21° C
Water temperature +15° C
Electrical consumption at +32° C (standard voltage)
Average power consumption at +43° C (standard voltage)

Models and specifications are subject to change without notice

Rev. 00 - Issued February 2026

BREMA
www.bremaice.it
info@bremaicegroup.it

We are Brema