Ice Cube

CB 1565 HC 2.0 Wi

B-Qube

Self-contained ice maker - Sprayer system
Daily production up to 160 kg

Hotel	●	●	●	●	●	●	●	○
Restaurant	●	●	●	●	●	●	○	○
Fast food	●	●	●	○	○	○	○	○
Bar	●	●	●	●	●	●	●	●
Disco	●	●	●	●	●	●	●	●
Fish markets	○	○	○	○	○	○	○	○
Supermarkets	○	○	○	○	○	○	○	○
Medical & SPA	●	●	○	○	○	○	○	○
Industry	●	○	○	○	○	○	○	○

Hotel	●	●	●	●	●	●	●	○
Restaurant	●	●	●	●	●	●	○	○
Fast food	●	●	●	○	○	○	○	○
Bar	●	●	●	●	●	●	●	●
Disco	●	●	●	●	●	●	●	●
Fish markets	○	○	○	○	○	○	○	○
Supermarkets	○	○	○	○	○	○	○	○
Medical & SPA	○	○	○	○	○	○	○	○
Industry	○	○	○	○	○	○	○	○

Available Drain Pump (DP) version

Available Drain Pump (DP) version

▶ Features & Plus

- Compact and crystal cube
- AISI 304 SS Scotch Brite finish
- Tropical class +43°C
- Air or water cooling system
- Remote operation and monitoring system
- Electronic probes
- Easy cleanable internal rounded surfaces
- HCFC-Free insulated storage
- RoHS Free
- Disappearing insulated door
- Adjustable Stainless Steel feet
- ON-OFF rocker switch
- Standard and special voltages
- HFC Free
- Automatic Washing system

Carrozzeria AISI 304 Scotch Brite

Adjustable stainless steel feet

Easy cleanable internal rounded surfaces

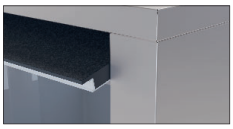

Disappearing insulated door

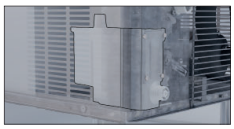

Drain Pump (DP)

3 Years Warranty subject to limitations

▶ Certifications available for this model

BREMA

www.bremaice.it
info@bremaicegroup.it

We are Brema Group

Ice Cube

CB 1565 HC 2.0 Wi

B-Qube

Self-contained ice maker - Sprayer system
Daily production up to 160 kg

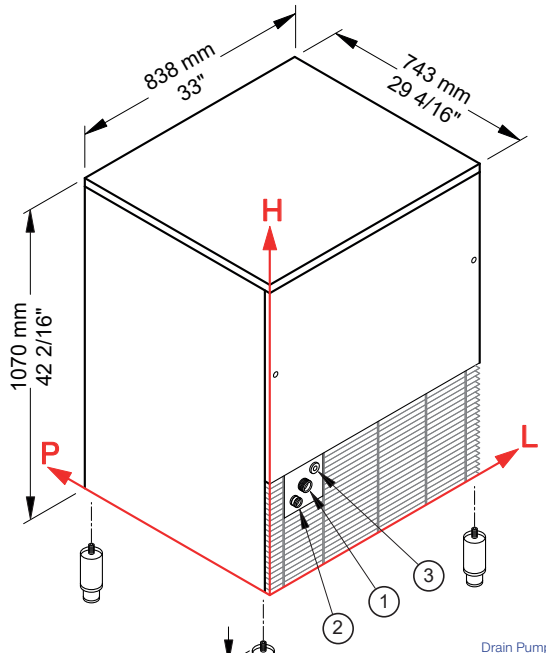

Installation

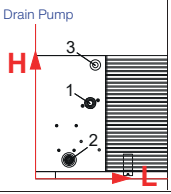

▶ Working conditions

- Location: **Indoor**

	Min	Max
Ambient temperature	+10° C / +50° F	+43° C / 110° F
Water temperature	+3° C / +37° F	+32° C / +90° F
Voltage	-10%	+10%
Water inlet pressure	1bar (14 psi)	6bar (84 psi)

▶ Available ice cube size

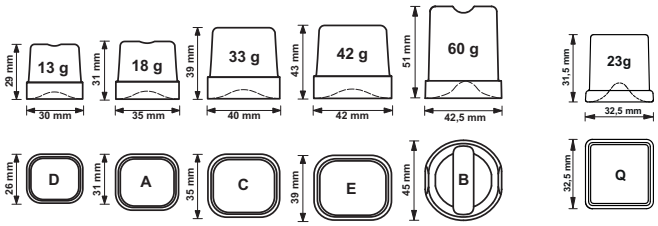

▶ Performances

Air temperature	Water temperature: 7° C	45° F	15° C	60° F	21° C	70° F
10° C	160 kg					
50° F		353 lbs				
21° C			152 kg			
70° F				335 lbs		
32° C					145 kg	
90° F						320 lbs

▶ Connections standard version

① Water in.: 141 mm / 5 9/16” - 290 mm / 11 7/16” - 3/4”

② Water out.: 79 mm / 3 2/16” - 245 mm / 9 10/16” - 24 mm / 15/16”

③ Electrical connections: 186 mm / 7 5/16” - 326 mm / 12 13/16”

Connections DP version

1 Water in.: 151 mm / 5 15/16” - 209 mm / 8 4/16” - 3/4”

2 Water out.: 92 mm / 3 10/16” - 52 mm / 2 1/16” - 24 mm / 15/16”

3 Electrical connection: 165 mm / 6 8/16” - 314 mm / 12 6/16”

All measures are referred to the rear bottom-left corner (L-H-Ø)

▶ Technical information

Production in 24h	152 kg / 335 lbs
Store capacity, up to	65 kg / 143 lbs
Cooling system	A - W
Kind of cube	A-18g, C-33g, D-13g, E-42g, B-60g, Q-23g
Refrigerant	R290
Standard voltage	220-240 V ~ 50 Hz
Average power consumption	1150 W
Fuse	16 A
Electrical consumption	20 kWh/100kg

Water consumption	A: 2 l/kg - 24 gal/100 lbs
	W: 11,9 l/kg - 142,6 gal/100 lbs
Sizes (L-P-H mm)	838 - 743 - 1070
(L-P-H in)	33 - 29 4/16 - 42 2/16
Sizes with pack (L-P-H mm)	880 - 785 - 1245
(L-P-H in)	34 10/16 - 30 14/16 - 49
Net weight	118 kg / 260 lbs
Gross weight	138 kg / 304 lbs
Finish	Stainless steel, 18/8, scotch brite

All the technical information must be considered at the following conditions:
Sizes without feet
Standard Cube (18g)
Ambient temperature +21° C
Water temperature +15° C
Electrical consumption at +32° C (standard voltage)
Average power consumption at +43° C (standard voltage)

Models and specifications are subject to change without notice

Rev. 00 - Issued February 2026

BREMA
www.bremaice.it
info@bremaicegroup.it

We are Brema